ES 4 Lab 2: Building circuits to do math

Prelab due 24 hours before your lab session, week of September 18
Lab report due at your next lab, week of September 25

1 Introduction

We've talked about how to represent numbers in binary, and how to manipulate bits with logic gates. In this lab, you'll combine that knowledge to build a circuit that compares two numbers. You'll also practice the skills necessary to build and debug a digital logic circuit using logic gate ICs.

After successfully completing this lab, you should be able to:

- Interpret datasheets for 74-series logic gate ICs, and use this information to draw a pin/package diagram from a logic diagram
- Wire multiple 74-series logic gate ICs together on a breadboard to implement a boolean equation
- Wire up switches and LEDs to provide act as digital inputs and outputs

2 Prelab

P1: Write a logic equation which implements $M > N$, where M and N are each 2-bit numbers. You can use M_1 and M_0 and N_1 and N_0 to represent the values of the individual bits. M_1 is the most significant bit:

M	M_1	M_0
0	0	0
1	0	1
2	1	0
3	1	1

There are multiple valid ways to do this.

P2: Draw a logic diagram that implements the logic equation above. *The following steps depend on getting this right, so talk to a TA or a classmate if you're not sure.*

Unfortunately, due to (painfully real) supply chain issues, you may need to tweak your design a bit. You are limited to the following chips:

- 74HC00 quad NAND
- 74HC04 hex inverter
- 74HC32 quad OR
- 74HC266 quad XNOR

See Appendix A.5 in the textbook for a good introduction to reading 74-series datasheets. The appendix is available online: https://booksite.elsevier.com/9780128000564/content/APP0A_Digital_System_Implementation.pdf

P3: Look at the datasheets for these parts (posted on the course website). How many chips of each kind do you need to build your circuit? Note that the chips contain several copies of each logic gate.

P4: Draw a second schematic diagram which uses the logic gates available to you. Label the inputs and outputs of the logic gates with the corresponding pin numbers on the IC package. See Figure eA.12 in the online appendix for an example.

P5: How will you prove that your circuit always gives the correct result?

P6: What will you do when your circuit doesn't work? Describe a process you could follow to pinpoint the problem.

3 In lab

L1: Build the switch inputs and LED output according to the schematic below, and power it using 5 V from the bench power supply. Use a multimeter to confirm that the switches are correctly producing high and low logic levels (0 and 5 V).

Important note that trips students up every year: Because we're using *pull-up* resistors, the logic value will be 0 when the switch is "on" and 1 when it is "off", as shown in the example on the right (where $M = N = 11$). This is counter-intuitive, but get used to it now because it'll show up in several more labs.

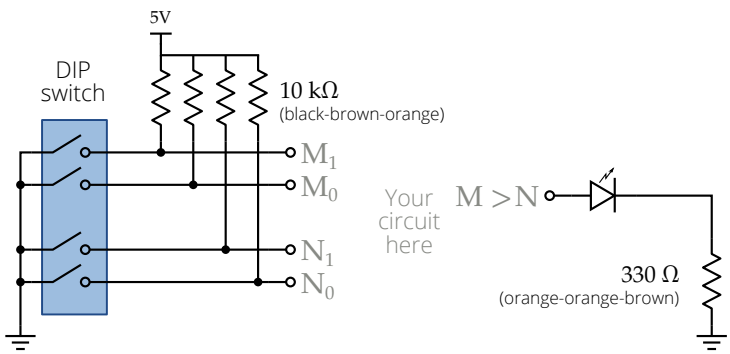

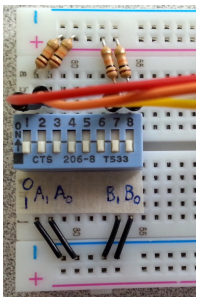

L2: Build part of your circuit (perhaps the M_1 and N_1 part), and confirm that it works. *Don't forget power and ground (V_{dd} and V_{ss}) for your IC's!*

L3: Complete your circuit, test it according to your plan, and demonstrate it to a TA. Take a picture for your lab report. Make sure to get the angle and lighting such that you could rebuild the circuit from the photograph if you had to.

L4: Leave your circuit assembled for next week; you may decide to re-use parts of it.

4 What to turn in

Your lab report should contain:

- Standard "front matter" (see the lab reports handout and template).
- Your logic equation and logic circuit diagrams (copied from your prelab and corrected as necessary).
- A photograph of your completed circuit.
- A description of your plan for testing your circuit, and a table or diagram of your results.
- Your "lab journal" pages — the notes you took as you built your circuit, descriptions of the problems you encountered and erroneous results you recorded, and your process for debugging them.
- Answers to the following questions:
  - What was the most valuable thing you learned, and why?
  - What skills or concepts are you still struggling with? What will you do to learn or practice these?
  - How long did it take you to complete the lab?