Warmup

What are the propagation delays for this circuit?

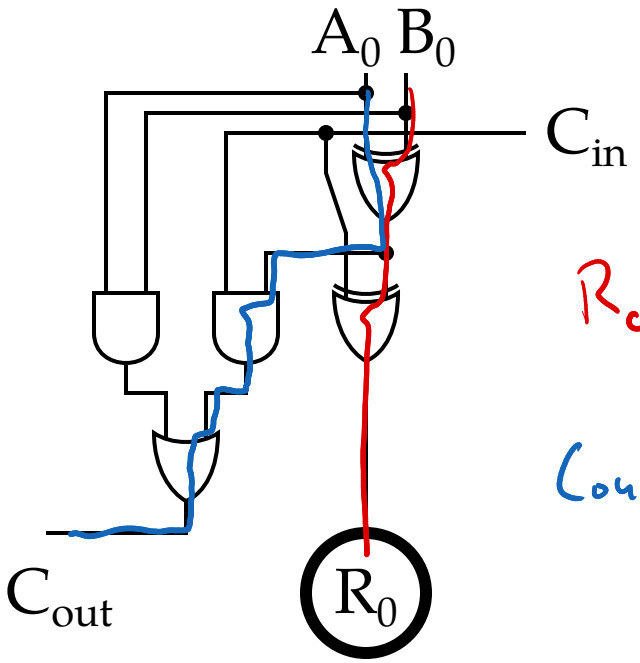

R_0 : $60_{ps} + 60_{ps}$
$= 120ps$

C_{out} : $60_{ps} + 30ps + 40_{ps}$

$= 130_{ps}$

Gate	t_{pd} (ps)	t_{cd} (ps)
NOT	15	10
2-input NAND	20	15
3-input NAND	30	25
2-input NOR	30	25
3-input NOR	45	35
2-input AND	30	25
3-input AND	40	30
2-input OR	40	30
3-input OR	55	45
2-input XOR	60	40

ES 4: Arithemetic circuits

Steven Bell

5 October 2023

Tufts UNIVERSITY

Logistics stuff

Exam on Tuesday, study sheet on the website

- You can bring one sheet of letter-size paper with your notes

Watch Piazza for information on study sessions

Monday is a holiday

- No labs, but watch Piazza for options

What's the point?

(over)simplified model of a processor

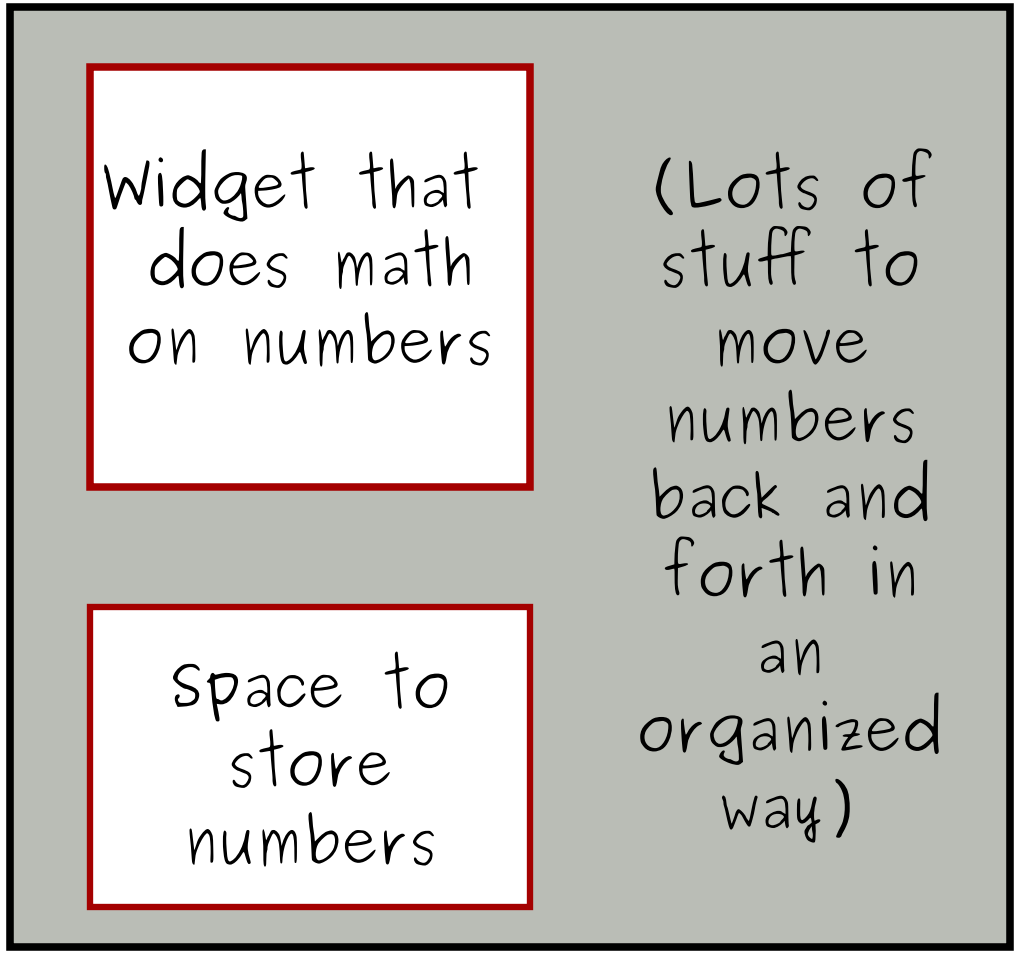

By the end of class today, you should be able to:

- Explain the basic principles of a carry-lookahead adder, and why it is faster than a ripple-carry adder.
- Explain what an ALU is, and describe the function of the control and flags signals.

Ripple-carry adder

$$\text{result} = A \oplus B \oplus C_{in}$$

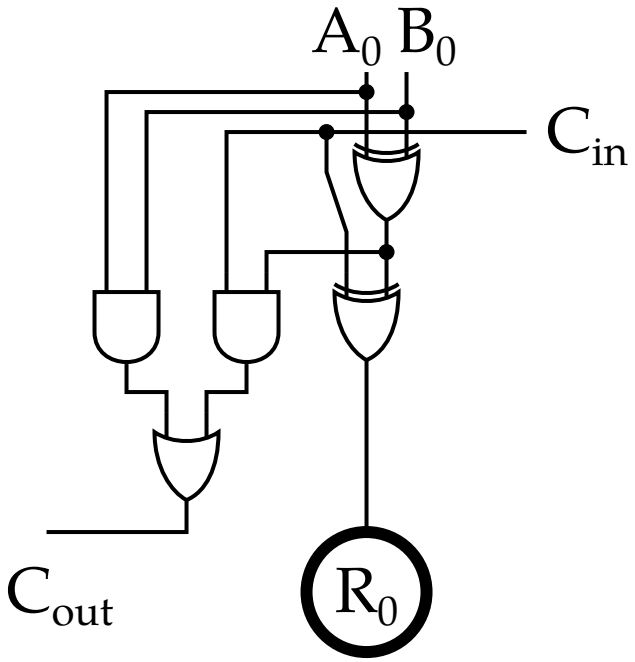

Carry-lookahead adder

What if we had a shortcut to computing the carry?

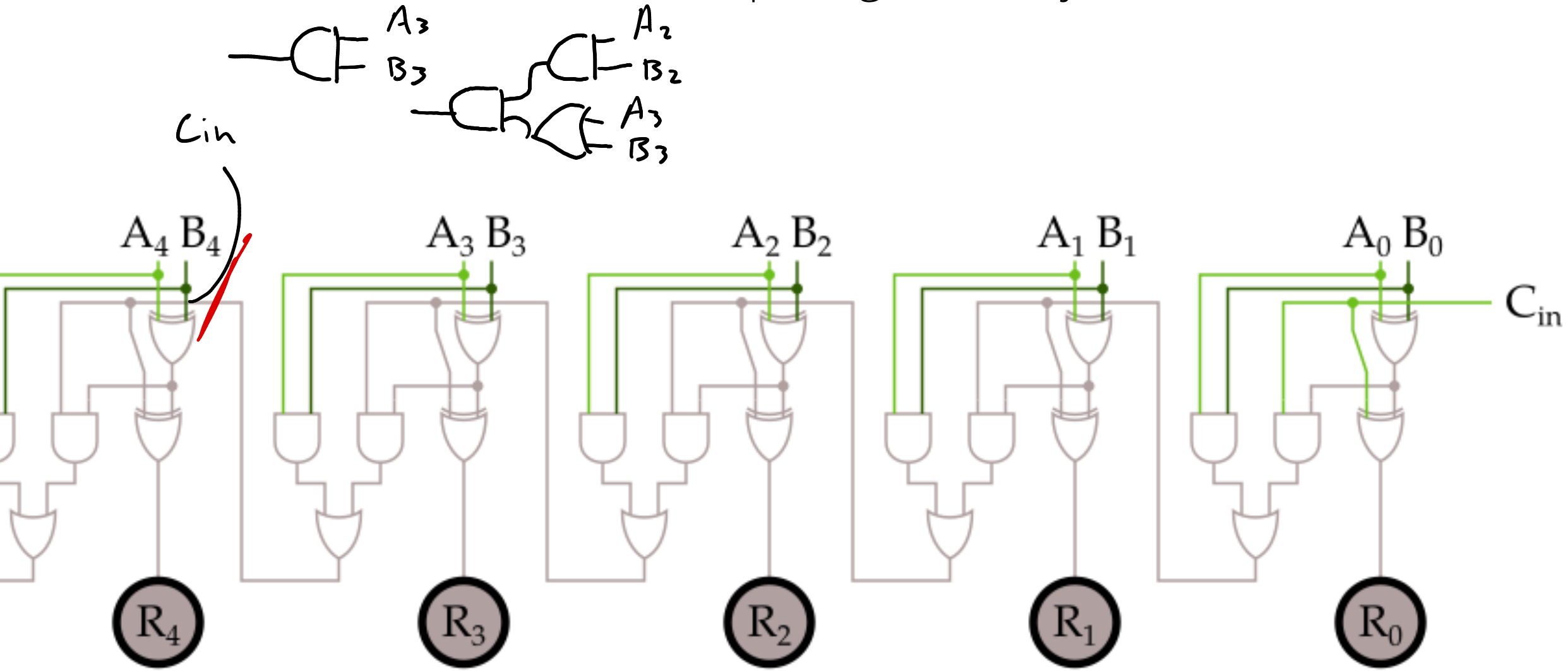

Moore's "law"

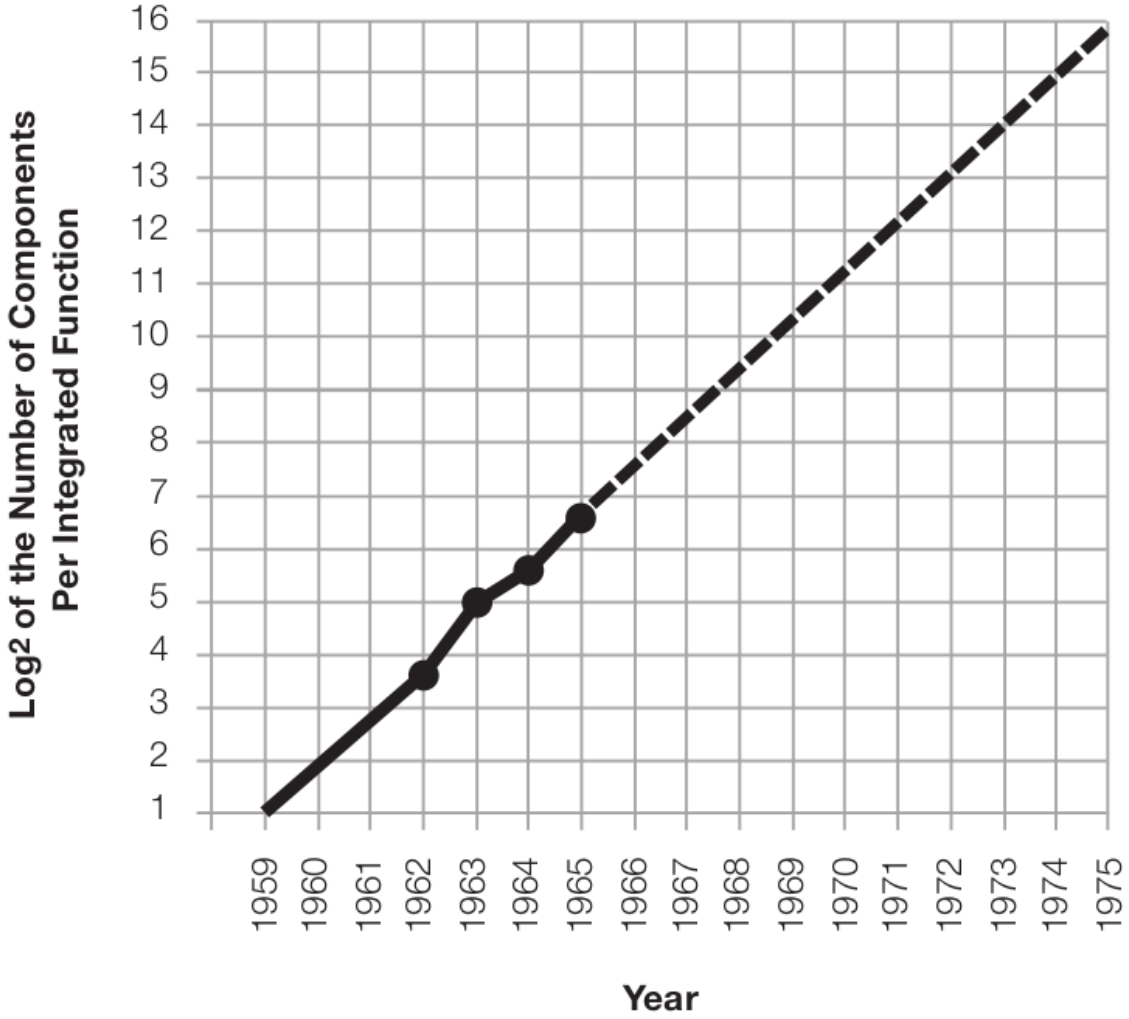

Gordon Moore, "Cramming more components onto integrated circuits" Electronics Magazine, April 1965

Prefix adder

```
int x[10]

x[3] = 2;
```

Multiplication

Works just like multiplication in decimal

			B	
		0	1	
A	0	0	0	
	1	0	1	

$$
\begin{array}{rrrrrrr}
 & & & 1 & 1 & 1 & 7 \\
\times & & & 1 & 0 & 1 & 5 \\
\hline
 & & & 1 & 1 & 1 & \\
 & & 0 & 0 & 0 & 0 & \\
+ & 1 & 1 & 1 & 0 & 0 & \\
\hline
 & 1 & 0 & 0 & 0 & 1 & 1 = 35 \\
 & 32 & 16 & 8 & 4 & 2 & 1
\end{array}
$$

Multiplication, faster

Write out some numbers in binary and multiply them by 4

Design a circuit that multiplies numbers by 4

$$
\begin{array}{rl}
3 & 011 \\
\times\ 4 & 100 \\
\hline
 & 000 \\
 & 000 \\
 & 011 \\
\hline
 & 01100 = 12
\end{array}
$$

always 00

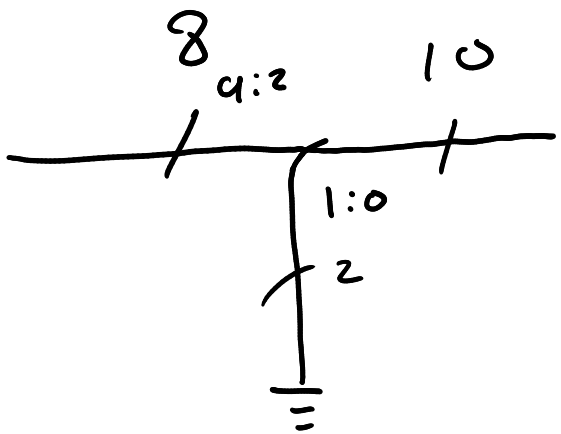

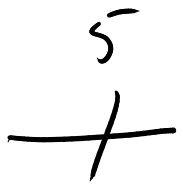

a bus with 5 bits

Challenge: design a circuit that multiplies numbers by 17

Division

Is slow and uses lots of hardware
But dividing by certain values is really easy…

What about negative numbers?

Arithmetic Logic Unit (ALU)

Don't memorize this, it's just one example

ALUControl

0 0 Add

0 1 Subtract

1 0 AND

1 1 OR

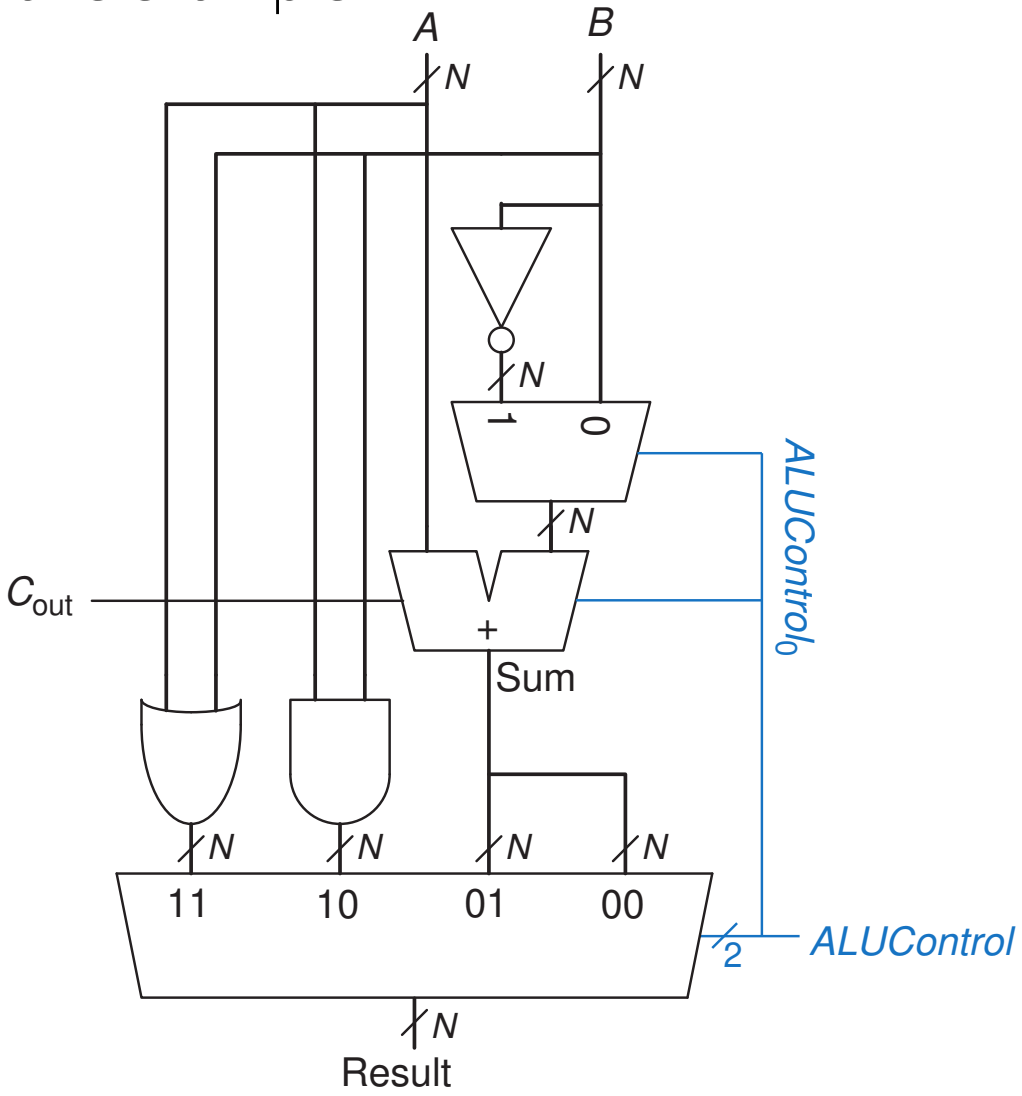

Where are we?

We've built lots of stuff with combinational logic

We can even build the core of a computer

After the exam, we're going to talk about storage